MEGMEET

Power Solutions

- ☐ Telecom Power
- ☐ Medical Power
- ☐ Smart Display Power
- ☐ LED Display Power
- ☐ Industrial enclosed Power
- ☐ Laser Power
- ☐ OA Power
- ☐ Utility Power
- ☐ Datacenter and Networking Power Solutions
- ☐ BESS
- ☐ EV Charging Solutions
- ☐ Portable Solar Generator
- ☐ Bi-directional Inverters for Portable Power

Industrial Automation

- ☐ Servo System
- ☐ Control System
- ☐ Elevator Controller
- ☐ Linear Motor
- ☐ IoT Solutions
- ☐ Encoder
- ☐ Variable Frequency Drive
- ☐ Internal Gear Pump

e-Mobility & EV Infrastructure

- ■ Integrated Charging System (OBC & DC-DC)
- ■ Power Electronic Unit (2-in-1, 3-in-1)
- ☐ E-Compressor
- ☐ TV EDU
- ■ Inverter
- ■ Construction Vehicle Controller
- ☐ Intelligent Active Hydraulic Suspension (i-AHS)
- ☐ Railway A/C Controller
- ☐ Railway VFD
- ☐ Thermal Mgmt. System
- ☐ Micro-Mobility Motor, Inverter, and Charging System
- ☐ Oxygen Generator

Intelligent Equipment

- ☐ Intelligent Welding
- ☐ Electric Submersible Progressing Cavity Pump
- ☐ Medium-Voltage Soft Open Point (SOP)
- ☐ Industrial Microwave
- ☐ Polysilicon Water Quenching Equipment
- ☐ Ultraviolet Curing Equipment
- ☐ Automated Car Washing Machine
- ☐ Booster Manipulator
- ☐ High-Precision Positioning Stage

Smart Building

- ☐ Residential A/C Controller
- ☐ Commercial A/C Controller
- ☐ Heat Pump Controller
- ☐ Vehicle A/C Controller
- ☐ Solar A/C Controller
- ☐ Mini Compressor Controller
- ☐ Refrigerator Controller
- ☐ Washer/Dryer Controller
- ☐ Residential Microwave
- ☐ Industrial Microwave
- ☐ Smart Bidet
- ☐ RF Thawing System
- ☐ Fan Heater Controller
- ☐ Oxygen Concentrator

Precision Connection

- ☐ Micro Motor
- ☐ Water Pump Motor
- ☐ Inductor
- ☐ Transformer
- ☐ FFC
- ☐ FPC
- ☐ Coaxial Cable
- ☐ CCS
- ☐ Litz Wire

FOLLOW US

MEGMEET

MEGMEET USA, Inc.

Addr. : 3839 Spinnaker Ct., Fremont, CA 94538

Version: 11192026

MEGMEET reserves the right to modify the technical parameters and appearance of the products in this catalogue without prior advice to the users.

MEGMEET

Off-Highway Machinery Solutions

Megmeet provides system-level electrical solutions for off-highway machinery, including motor inverters, motors, power supplies, chargers, hydraulics, hydraulic pumps and X-in-1 integrated systems.



MEGMEET

Engineered to Empower™

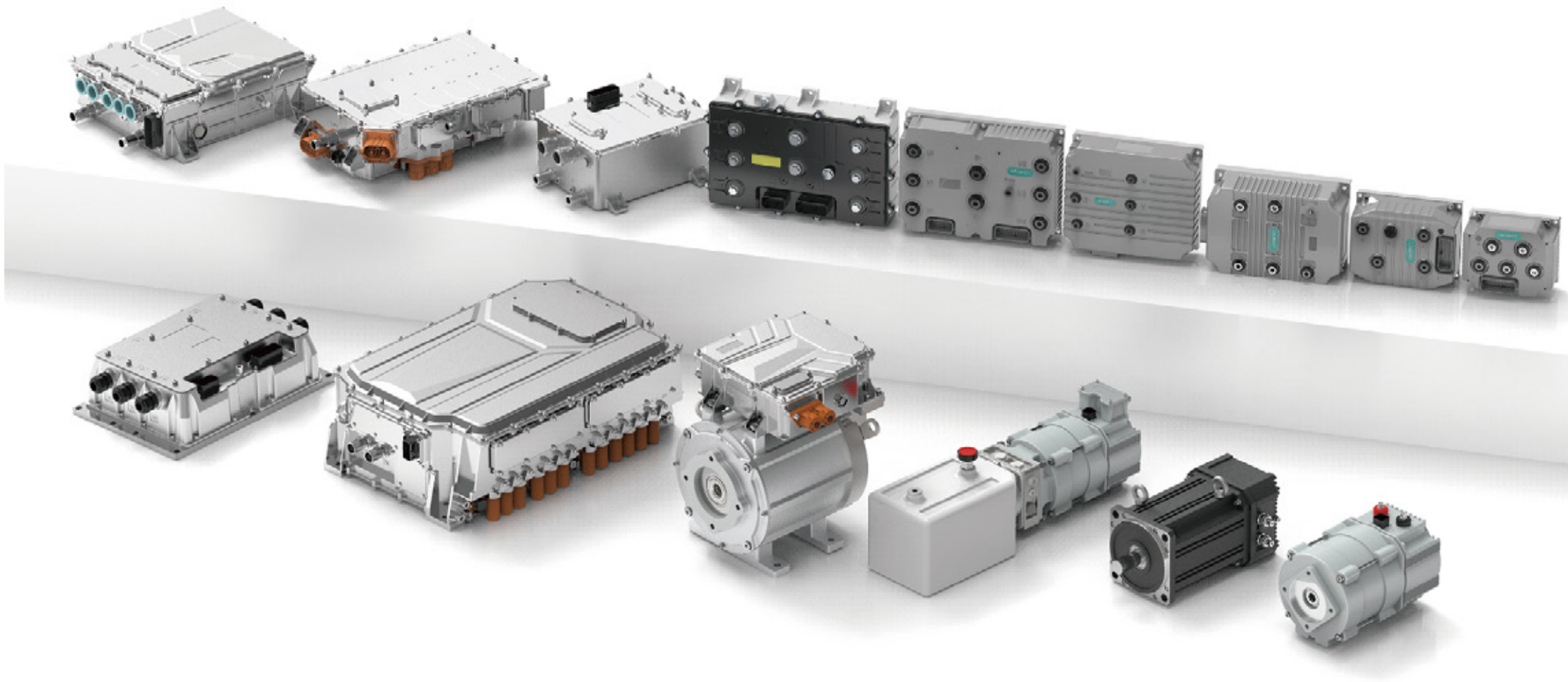

CONTENTS

01-02 Company Profile

01 About MEGMEET

02 R&D and Manufacturing Capabilities Professional Test Platforms

03-15 Electric Drive & Power Supply Solutions

03 Wheel Loader

05 Excavator

07 Aerial Work Platform

09 Warehouse Logistics Equipment / AGV

11 Utility & All Terrain Vehicle

13 Mining Dump Truck

15 Special Purpose Construction Vehicle

16-23 Model Description & Product Portfolio

16 Low-voltage Inverter Model Description & Product Portfolio

19 Low-voltage Motor-inverter Unit Model Description & Product Portfolio

21 High-voltage Inverter Model Description

21 High-voltage Motor-inverter Unit Product Portfolio

22 High-voltage Inverter Product Portfolio

23 OBC/ Power Supply Model Description & Product Portfolio

MEGMEET
Engineered to Empower™

About Us

MEGMEET is a $1.3B global power and energy company specializing in high-efficiency power solutions for datacenters, e-Mobility, healthcare, industrial automation and renewable energy. With R&D, manufacturing facilities and global operations across North America, India, Thailand, China and Germany, MEGMEET is Engineered to Empower™ the future of AI, Industrial, and e-Mobility Markets.

$1.3B USD
Revenue 2025

28%
Revenue CAGR
2015–2025

10
R&D Centers

8
Manufacturing
Centers

34%
R&D Staff

10K+
Total Employees

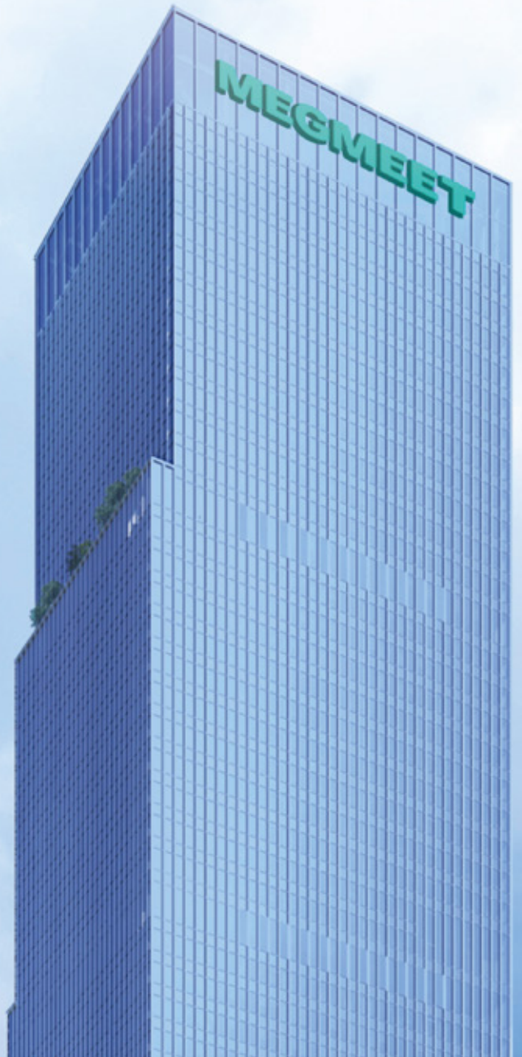

Global R&D and Manufacturing Infrastructure


Changsha


Shenzhen


Zhuzhou


Hangzhou


India


Thailand

Testing Capabilities & Management System

Built a full-featured, wide-coverage, comprehensive testing platform



EMC


Reliability


Safety


Industry-Specific Lab

Wheel Loader

Solution Features

High Integration

Multiple integrated configurations optional: Duo main drive / Triple main drive+ DC/DC + PDU + Auxiliary drive, etc

High Reliability

Passed durability, high-temperature, strong magnetic-field and severe-vibration tests; supporting extended Functional Safety certification

Applicable Models 1.5~3 t, 5~7 t Wheel Loaders, full range of Fork-wheel Loaders

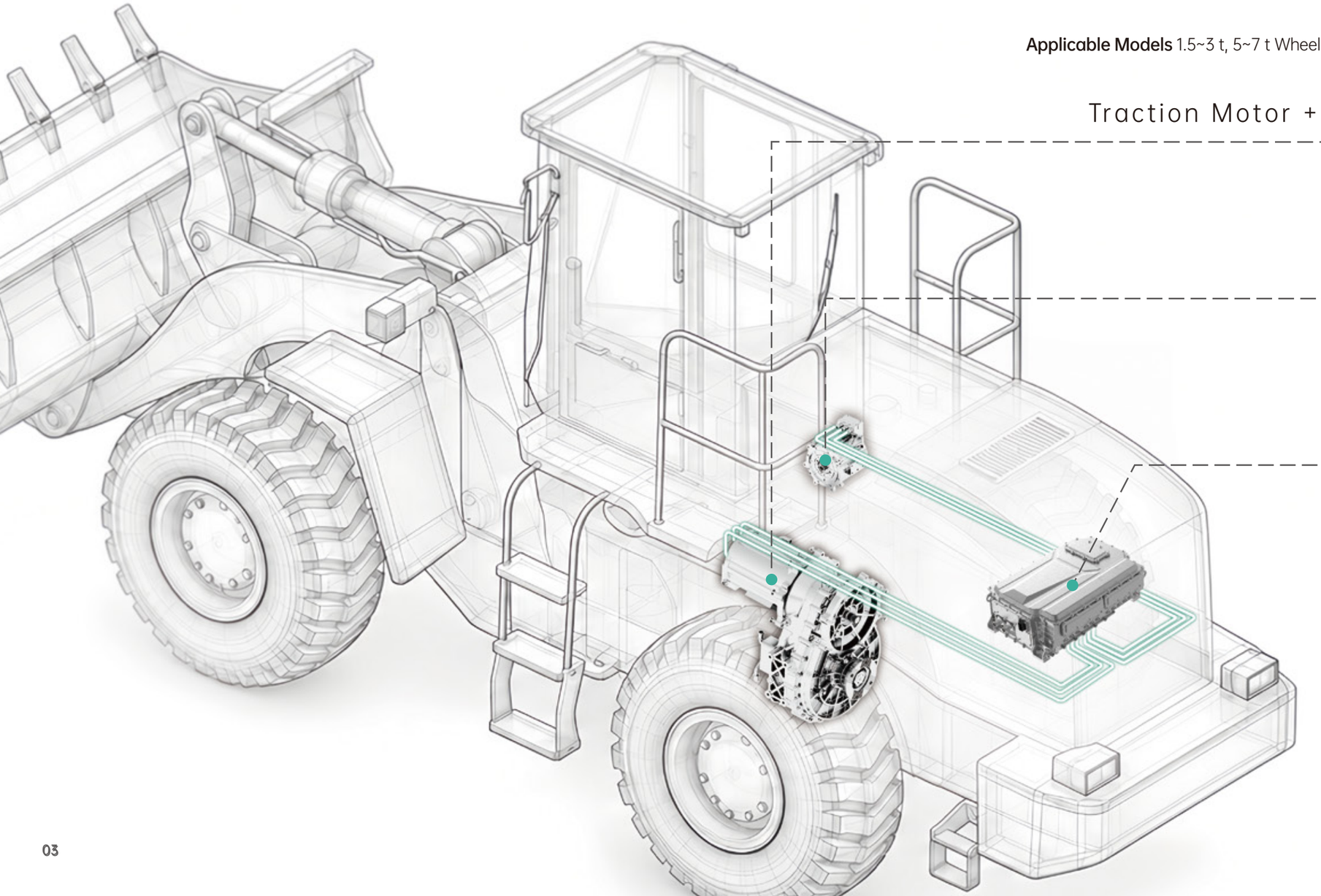

Excavator

Solution Features

Flexible Configuration

Adaptable for mini, medium, and heavy excavators with wide 48~800 V coverage

High Reliability

IP68 / IP69K protection grade, passed high/low-temperature, high-vibration and high-altitude tests, supporting Functional Safety certification

Applicable Models 0.8~5 t mini-excavators, 6~20 t small and medium excavators, excavators above 21 t.
Battery-electric, Tethered-electric, Hybrid-electric variants, etc

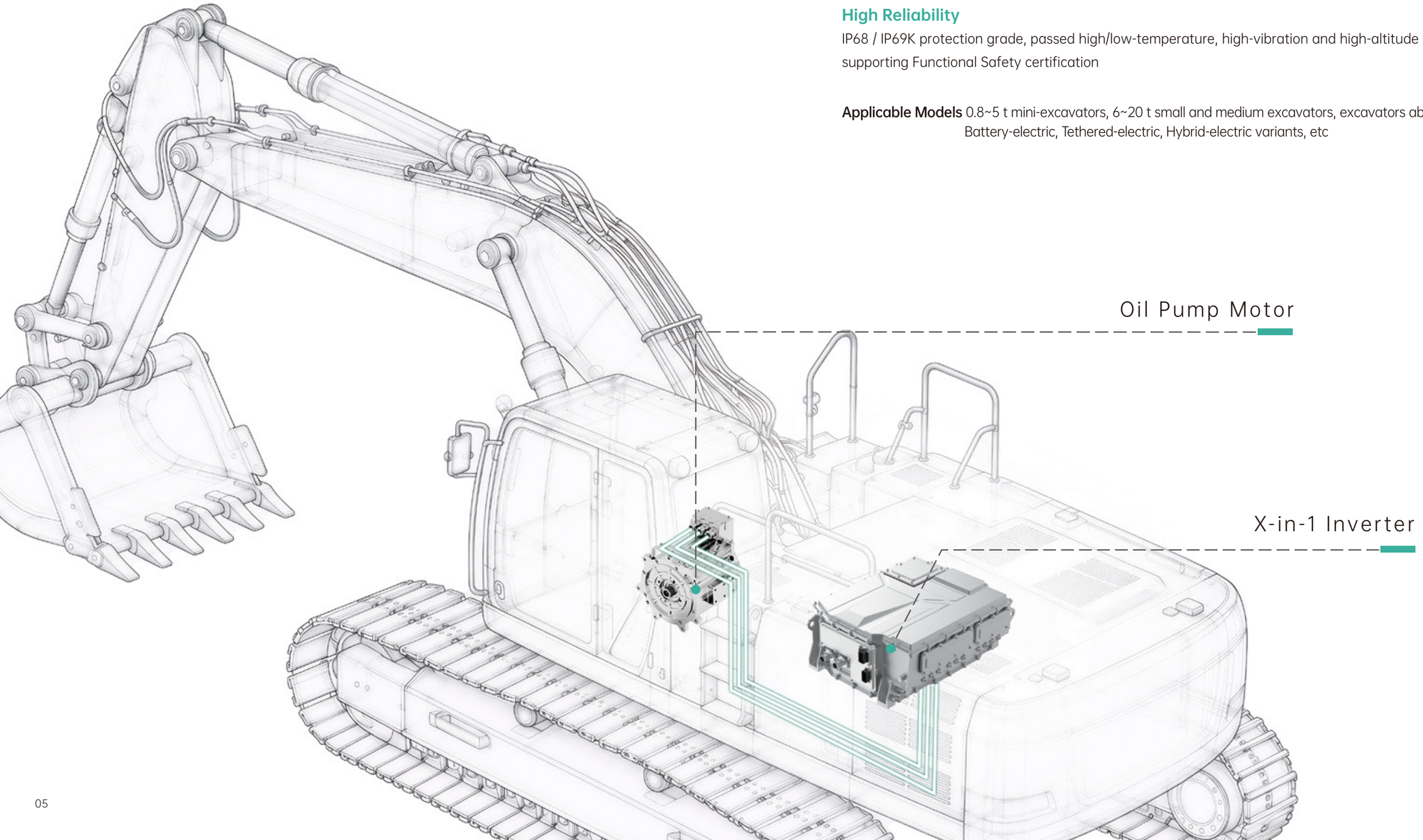

Aerial Work Platform

Solution Features

Complete Product Portfolio

Covering scissor lifts 6~22 m (24~80 V), boom lifts 16~70 m (48~410 V)

Flexible Options

Multiple configurations including single / duo inverters, permanent-magnet integrated motor-inverter units , supporting driving modes such as wheel-hub drive and axle drive

Safety & Reliability

Complying with EN ISO 13849 Functional Safety certification, IEC 62443 Cyber Security certification, supporting UDS fault diagnosis and OTA remote upgrade

Applicable Models Standard scissor lifts, Rough-terrain scissor lifts, Tracked scissor lifts; Straight-boom lifts, Articulated-boom lifts, Spider lifts; Battery-electric, Hybrid-electric variants, etc

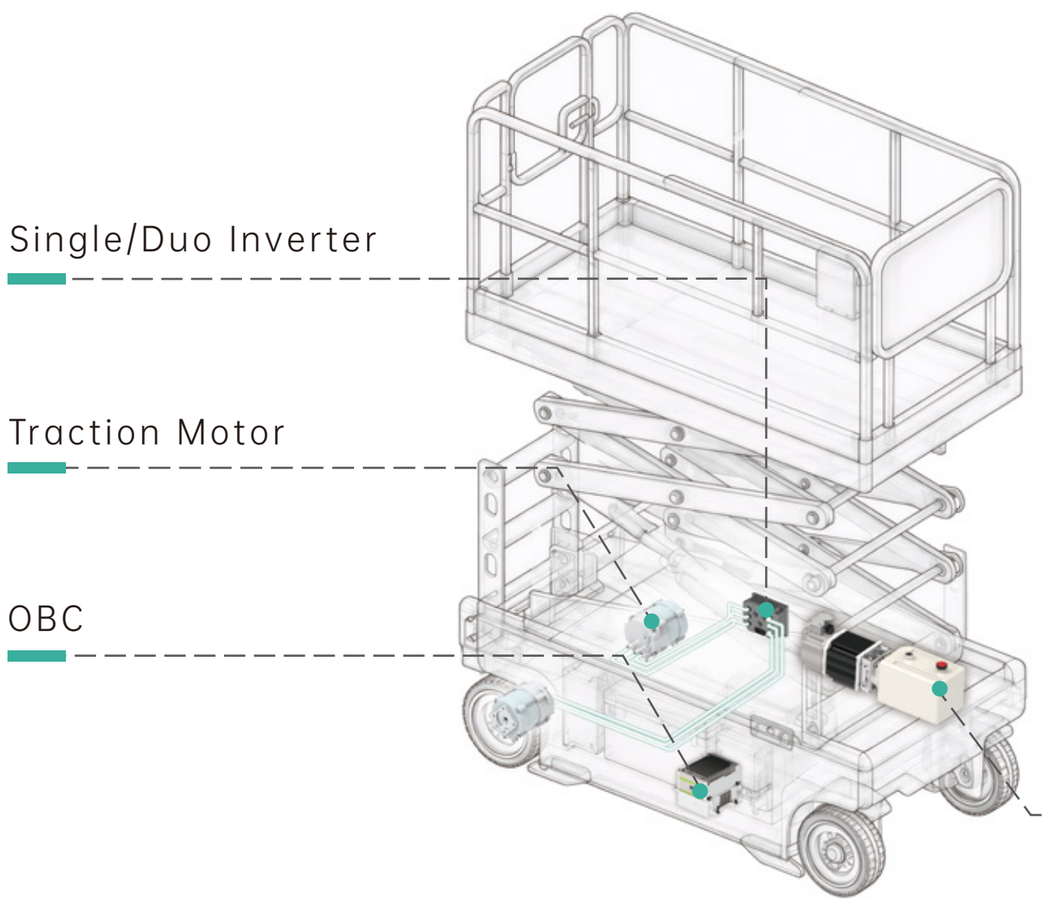

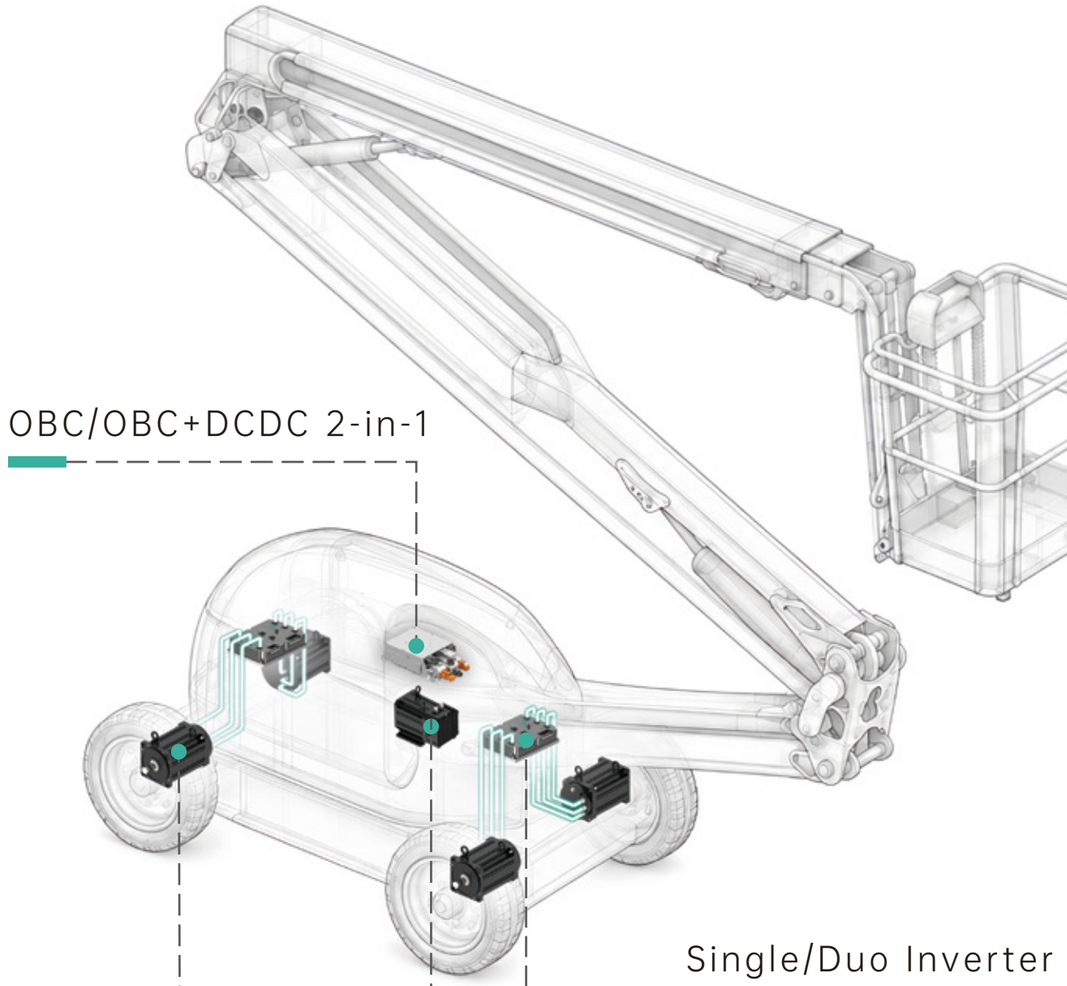

Warehouse Logistics Equipment / AGV

Solution Features

High Integration

Single or X-in-1 inverter for traction, oil-pump and steering functions available, permanent-magnet integrated motor-inverter units can be provided

High Performance

Featured with precise control, fork vibration suppression, wide-temperature-range adaptability, complex road condition handling, dynamic energy recovery and more.

Safety & Reliability

Complying with EN 1175 Functional Safety Certification, IEC 62443 Cyber Security Certification, supporting UDS fault diagnosis and OTA remote upgrade

Applicable Models 2~5 t and above 5 t electric counterbalance forklifts; 1~3 t warehouse forklifts

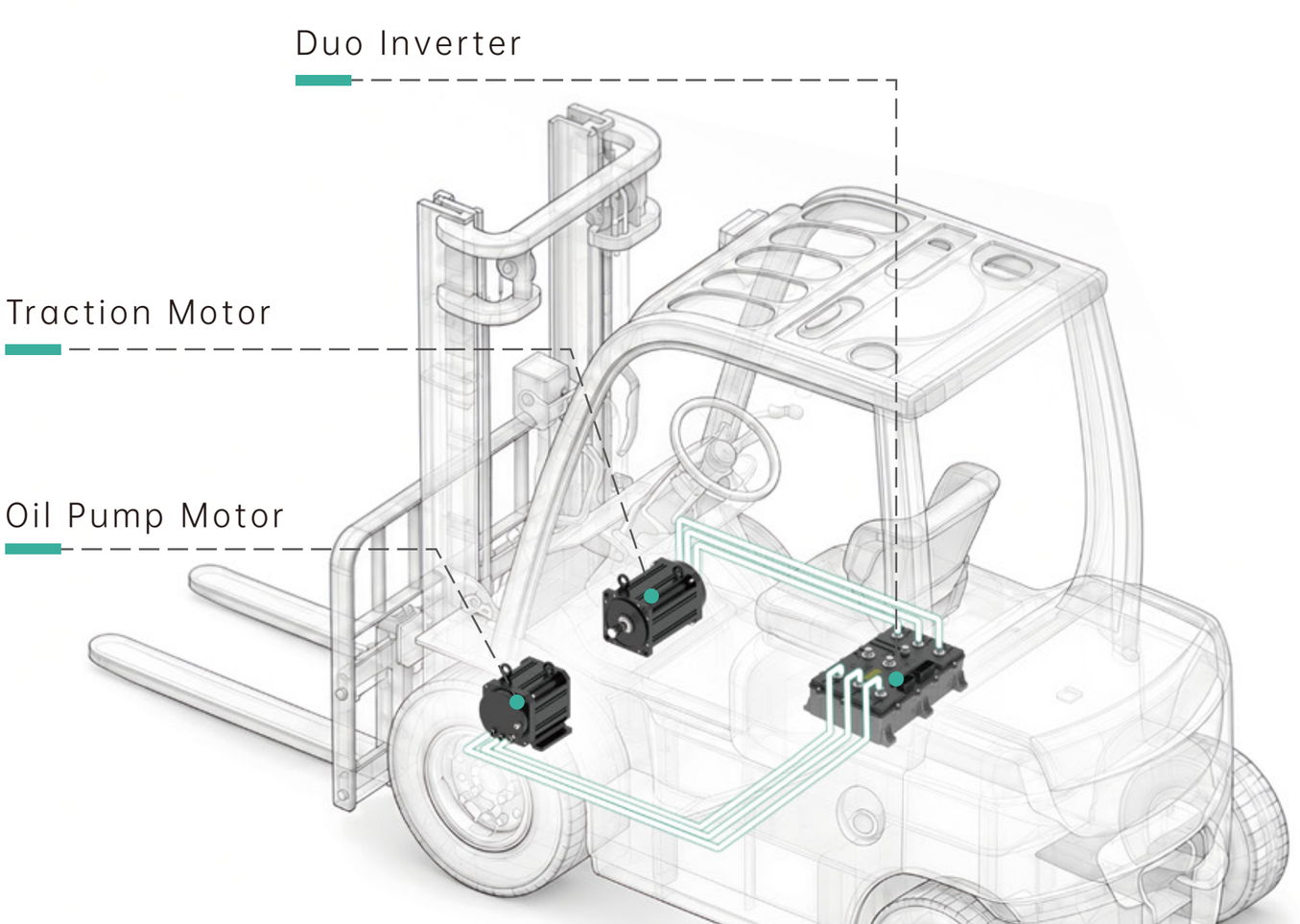

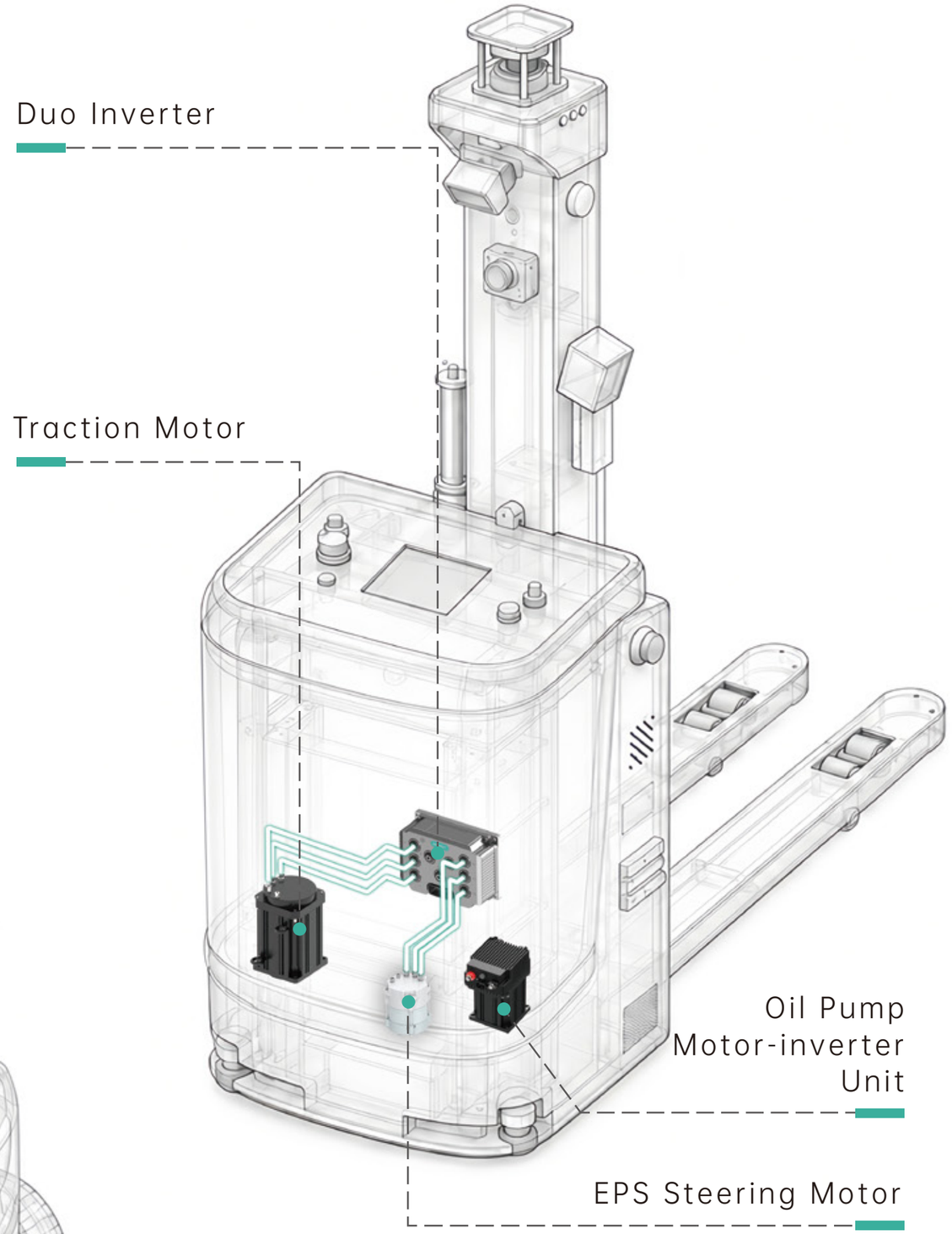

Utility & All Terrain Vehicle

Solution Features

Complete Product Portfolio
Voltage range: 48~410 V; Current range: 200~650 A

High Efficiency
Multi-driving modes optional with precise control to enhance active safety and driving experience

Safety & Reliability
Complying with CE & UL certifications

Applicable Models All-terrain vehicles (ATV/UTV), golf carts, sightseeing vehicles

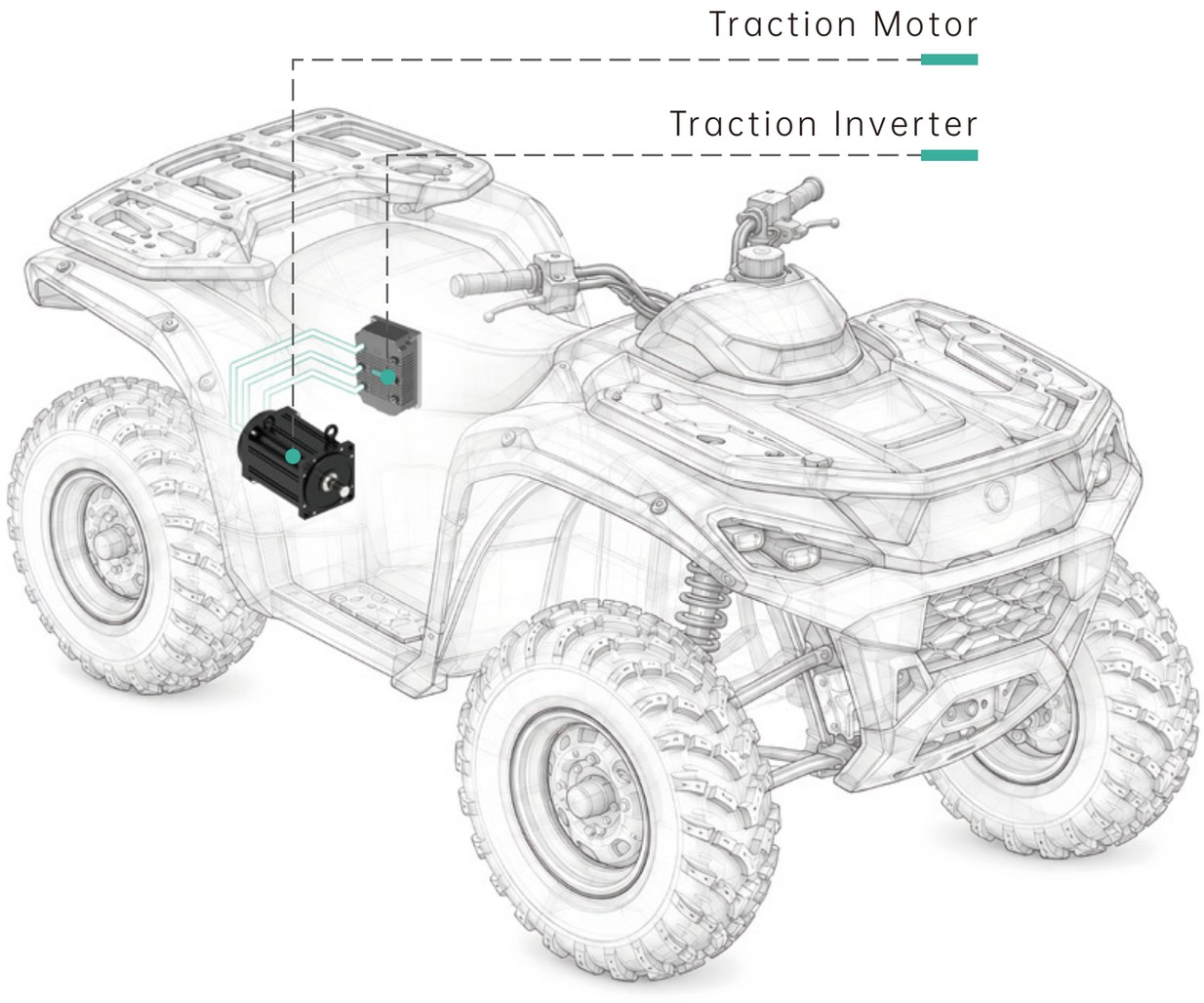

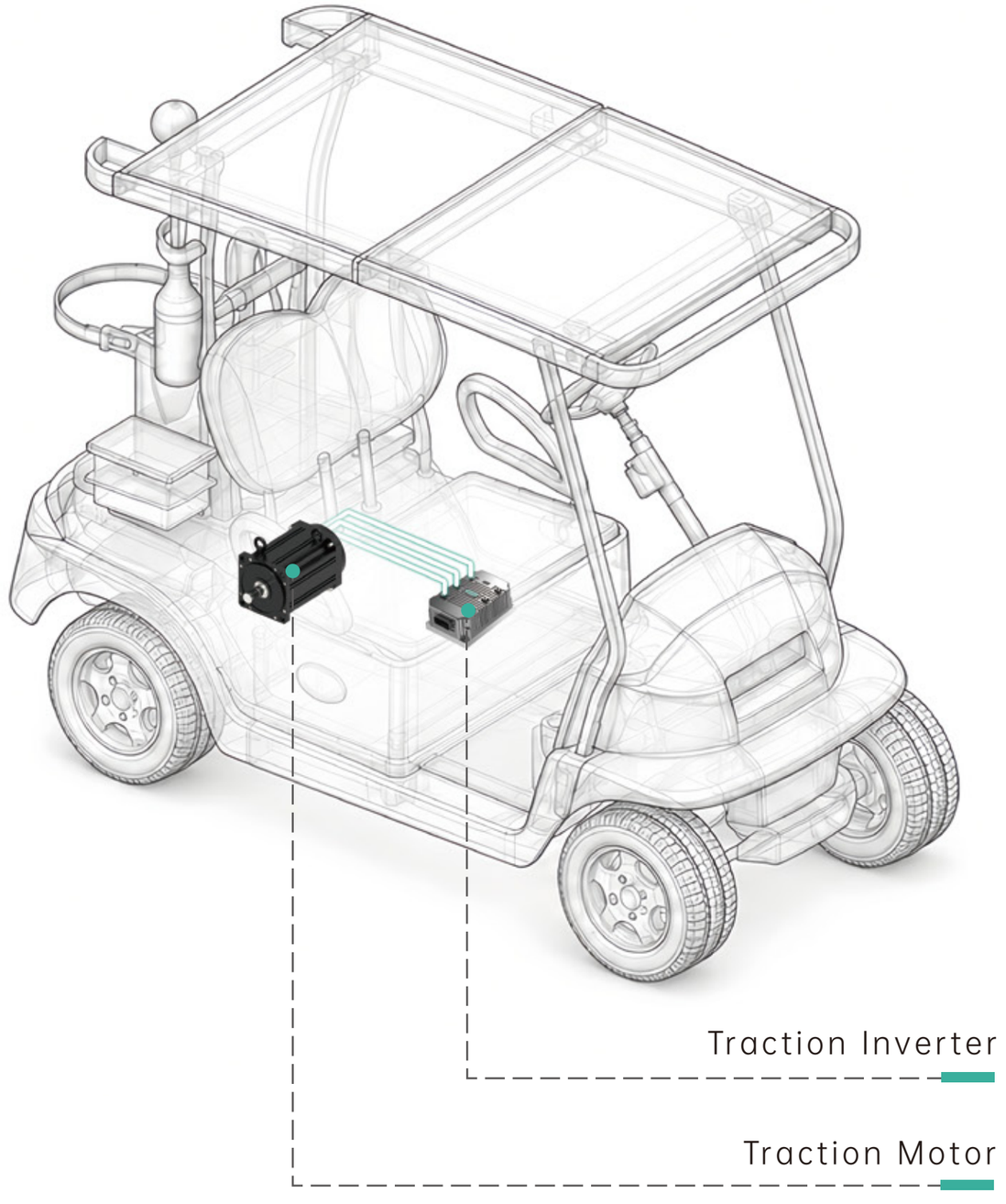

Mining Dump Truck

Solution Features

High Integration

X-in-1 inverter integrates main inverter + DC/DC + Auxiliary inverter + PDU, configured with high-power single inverter unit

High Energy Efficiency

Enhanced energy-recovery algorithm for longer driving range and stronger power output

High Reliability

Meeting mining truck requirementsfor 5500 m high-altitude operation, IP68/IP69K high-protection grade, 6 g random vibration and 50 g shock vibration

Applicable Models 70~130 t, 130~230 t mining dump trucks (mining trucks);
Battery-electric, Hybrid-electric variants etc

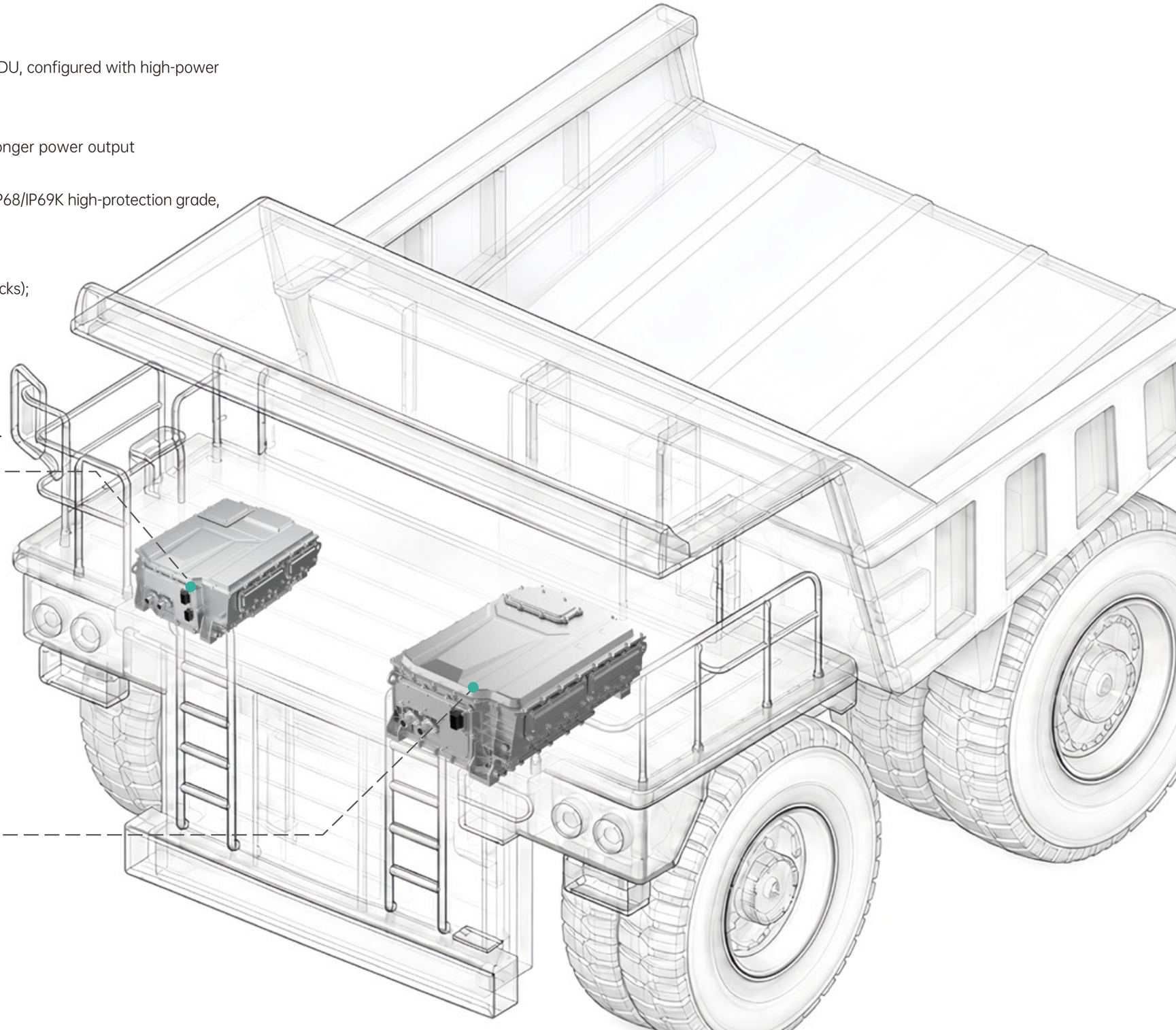

Special Purpose Construction Vehicle

Solution Features

High Integration

X-in-1 inverter integrates main drive + DC/DC + auxiliary drive + PDU, with reserved power supply interfaces for vehicle superstructure

High Efficiency

Adopting optimized algorithms and coordinated control between chassis and superstructure for low power consumption during operation standby mode

High Reliability

IP68/IP69K high-protection grade, covering both chassis and superstructure drive

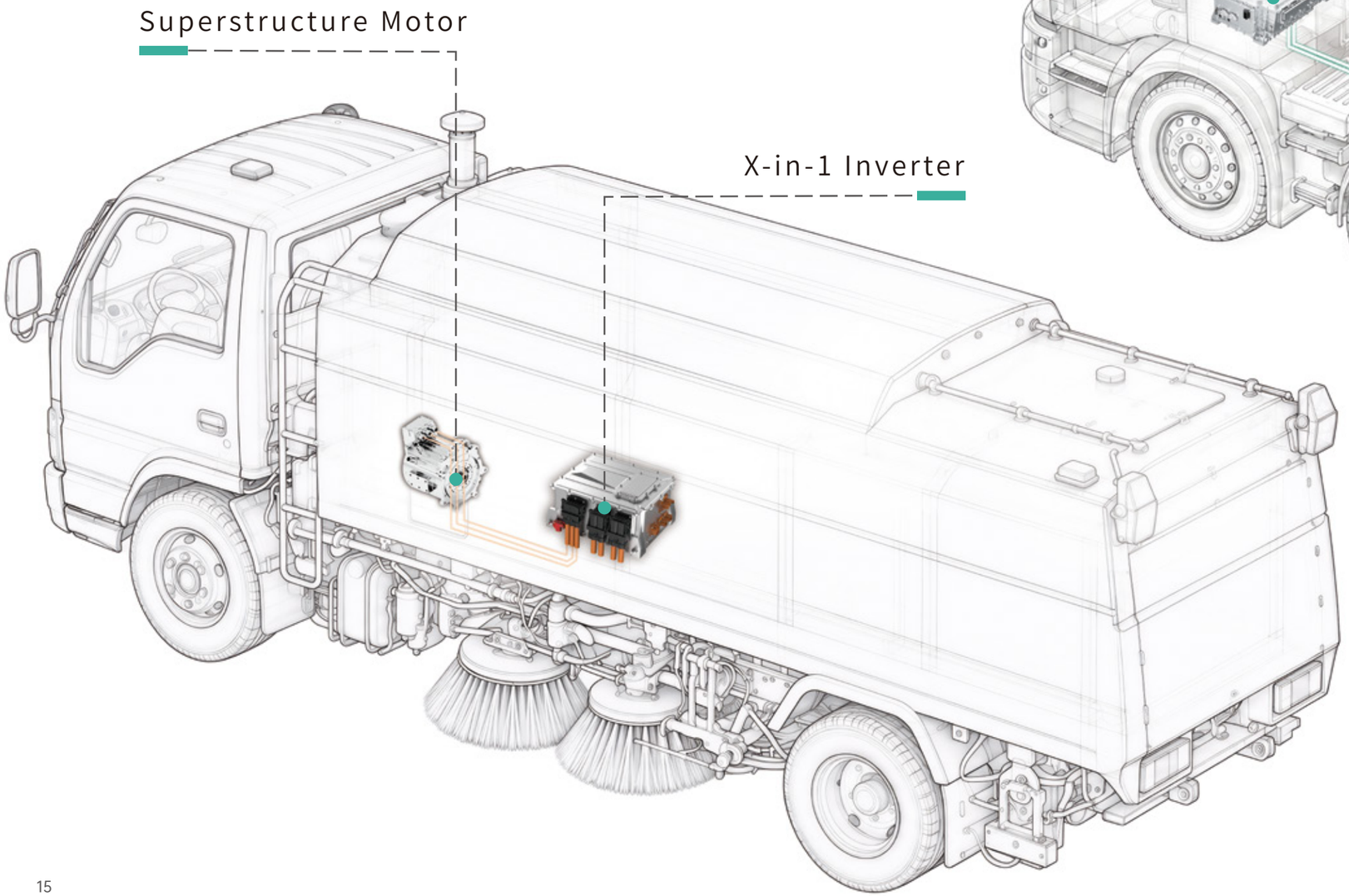

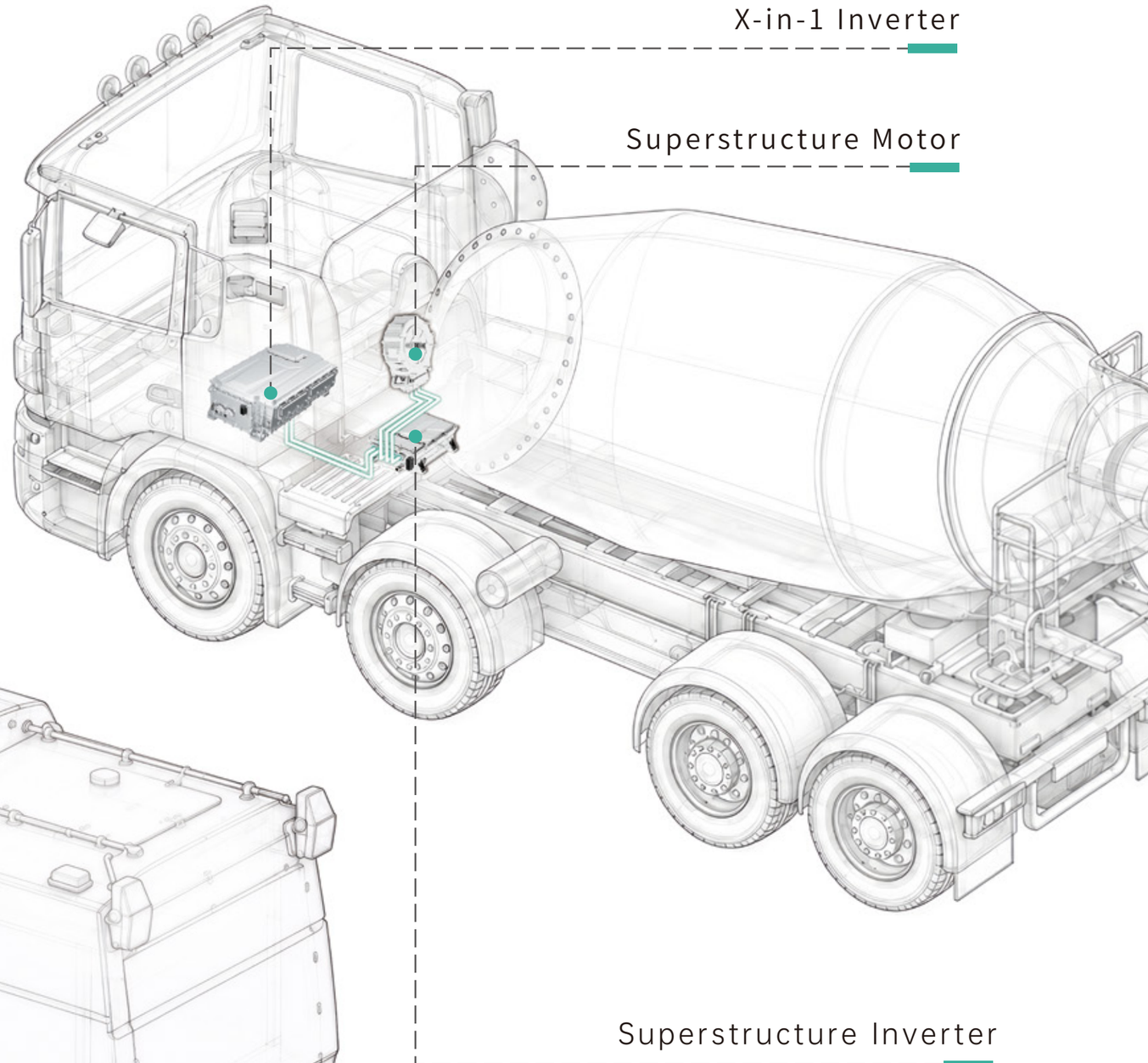

Low-voltage Inverter Model Description

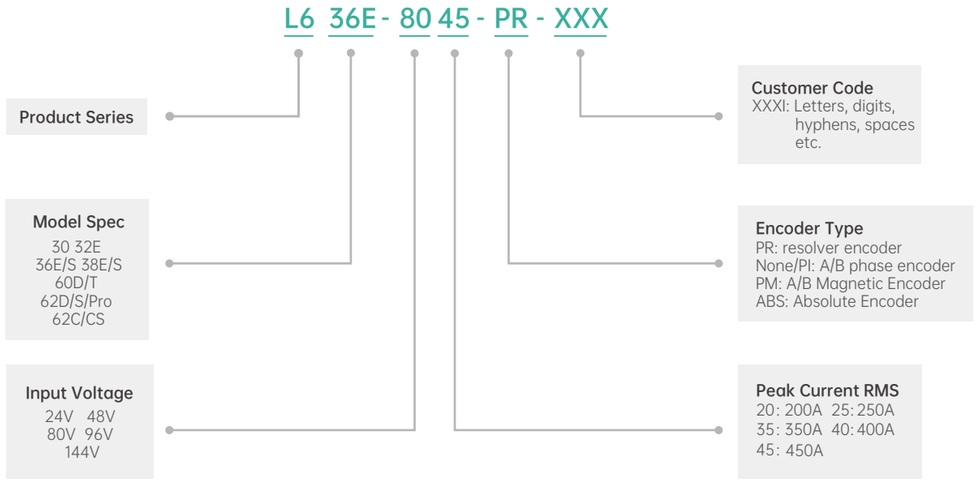



L628S/L630 Series
LWH: 155×120×76mm



L632E Series
LWH: 180×140×73.5mm



L636E/S Series
LWH: 232×165×92mm



L638E/S Series
LWH: 275×232×92mm



L660D/T Series
LWH: 206×150×69.3mm



L662D/S Series
LWH: 275×200×75mm



L662C/CS Series
LWH: 348.6×230×97mm



L662D PRO Series
LWH: 394×250×114mm

Low-voltage Inverter Product Portfolio

Model	Voltage Level	Operating Voltage	Output Current		IP Rating	Cooling Type
			1h	2min		
L628S-4807-X	48VDC	36V~54V	50A	70A	IP65	Natural
L628S-8012-X	80VDC	72V~96V	50A	120A	IP65	Natural
L630-2424-X	24VDC	20V~28V	80A	240A	IP65	Natural
L630-2428-X	24VDC	20V~28V	84A	280A	IP65	Natural
L630-4820-X	48VDC	36V~54V	84A	200A	IP65	Natural
L632E-2437-X	24VDC	20V~28V	185A	375A	IP65	Natural
L632E-4835-X	48VDC	36V~54V	135A	350A	IP65	Natural
L636E/S-4845-X	48VDC	36V~54V	150A	450A	IP65	Natural
L636E/S-8035-X	80VDC	56V~96V	120A	350A	IP65	Natural
L636E/S-8045-X	80VDC	56V~96V	150A	450A	IP65	Natural
L636E/S-8055-X	80VDC	56V~96V	160A	550A(1min)	IP65	Natural
L636E/S-9620-X	96VDC	72V~120V	90A	200A	IP65	Natural
L636E/S-9635-X	96VDC	72V~120V	100A	350A	IP65	Natural
L636E/S-1420-X	144VDC	105V~165V	120A	200A	IP65	Natural
L636E/S-1435-X	144VDC	105V~165V	100A	350A	IP65	Natural
L638E/S-4865-X	48VDC	33V~60V	200A	650A	IP65	Natural
L638E/S-8055-X	80VDC	56V~96V	160A	550A	IP65	Natural
L638E/S-8065-X	80VDC	56V~96V	200A	650A	IP65	Natural
L638E/S-8080-X	80VDC	72V~96V	300A	800A	IP65	Forced Air
L638E/S-9650-X	96VDC	72V~110V	155A	500A	IP65	Natural
L638E/S-9675-X	96VDC	72V~115V	300A	750A	IP65	Natural
L638E/S-1435-X	144VDC	105V~165V	100A	350A	IP65	Natural
L638E/S-1450-X	144VDC	105V~165V	135A	500A(1min)	IP65	Natural
L660D/T-2424-X	24VDC	20V~28V	2*85A	2*240A(1min)/DC pump output 280A	IP65	Natural
L660D/T-2435-X	24VDC	20V~28V	2*120A	2*350A(1min)/DC pump output 280A	IP65	Natural
L660D/T-4830-X	48VDC	33V~60V	2*150A	2*300A(1min)/DC pump output 280A	IP65	Forced Air
L662D/S-4835-X	48VDC	33V~60V	2*120A	2*350A	IP65	Natural
L662D/S-4845-X	48VDC	33V~60V	2*150A	2*450A	IP65	Forced Air
L662D/S-8035-X	80VDC	56V~96V	2*120A	2*350A	IP65	Natural
L662D/S-8045-X	80VDC	56V~96V	2*150A	2*450A	IP65	Natural
L662C/CS-4835-X	48VDC	33V~60V	2*120A	2*350A	IP65	Natural
L662C/CS-4845-X	48VDC	33V~60V	2*150A	2*450A	IP65	Natural
L662C/CS-4855-X	48VDC	33V~60V	2*200A	2*550A	IP65	Natural

Low-voltage Inverter Product Portfolio

Model	Voltage Level	Operating Voltage	Output Current		IP Rating	Cooling Type
			1h	2min		
L662C/CS-8035-X	80VDC	56V~96V	2*120A	2*350A	IP65	Forced Air
L662C/CS-8045-X	80VDC	56V~96V	2*150A	2*450A	IP65	Natural
L662C/CS-8055-X	80VDC	56V~96V	2*200A	2*550A	IP65	Forced Air
L662C/CS-9635-X	96VDC	72V~115V	2*120A	2*350A	IP65	Natural
L662C/CS-1420-X	144VDC	105V~165V	2*120A	2*200A	IP65	Natural
L662C/CS-1435-X	144VDC	105V~165V	2*135A	2*350A	IP65	Forced Air
L662D-4835-PRO	48VDC	33V~60V	2*150A	2*350A	IP67	Natural
L662D-4845-PRO	48VDC	33V~60V	2*200A	2*450A	IP67	Natural
L662D-8035-PRO	80VDC	56V~96V	2*150A	2*350A	IP67	Natural
L662D-8045-PRO	80VDC	56V~96V	2*225A	2*450A	IP67	Forced Air

Low-voltage Motor-inverter Unit Model Description

L6 30 - 24 20 - P 141 B 140 30 X 15 R A

Product Series

Model Spec

Input Voltage
24V 48V
80V

Peak Current RMS
20:200A
35:350A
45:450A
55:550A

Motor Type
P: PMSM
PE: PMSM Flatwire

Stator OD mm
141: 141 200: 200

Oil Pump —B
Traction —Q

Max Torque : 140Nm

Max Speed : 3000rpm; 30*100

Structure
X: Standard (Natural)
D: Cable Outlet PRO (Natural)
W: Forced Air
G: Cable Outlet PRO(Forced Air)
W: Liquid Cooling
V: Cable Outlet PRO(Liquid Cooling)

Rated Power :15kW

Encoder Type
R: Resolver Z: ABZ INC
A: Absolute S: SIN/COS

Version

Low-voltage Motor-inverter Unit Product Portfolio



L626 Motor-inverter Unit Series
LWH: 239.5×133×172.5mm



L630 Motor-inverter Unit Series
LWH: 246.5×138×234mm



L636Motor-inverter Unit Series
LWH: 412.3×231×231mm



Motor-inverter Unit
Forced Air Series
LWH: 482×246×298mm

Model	Voltage Level	Peak Output					Rated Output					Peak Speed (rpm)	IP Rating	Cooling Type
		Current (A)	Toque (N.m)	Speed@ Peak Torque (rpm)	Power (kW)	Duty Cycle	Current (A)	Toque (N.m)	Rated Speed (rpm)	Power (kW)	Duty Cycle			
L626-2430-P122B02040X5RA	24VDC	295	25	1590	5.5	S2-30s	224	20	2400	5	S2-3min	4000	IP67	Natural
L630-2420-P151B01535X2RB	24VDC	136	15	1400	2.2	S2-2min	44	4.4	3218	1.46	S2-60min	3450	IP67	Natural
L630-2420-P151B02440X3RA	24VDC	210	24	1590	4	S2-2min	95	9.5	2500	2.5	S2-60min	4000	IP67	Natural
L630-2428-P151B02035X4RA	24VDC	269	20	2100	4.4	S2-2min	158	12	3000	3.8	S2-10min	3500	IP67	Natural
L630-4811-P151B02335X3RA	48VDC	112	23	1500	3.6	S2-8min	65	13	1830	2.5	S2-60min	3500	IP67	Natural
L630S-8006-P151B01730D2RA	80VDC	54	17	2078	3.7	S2-2min	27	8	2500	2	S2-60min	3000	IP67	Natural
L630E-8010-P151B04035X3RB	80VDC	120	40	1647	6.9	S2-2min	52	21	1500	3.3	S2-60min	3500	IP67	Natural
L630S-8010-P151B04335D4RA	80VDC	106	43	1665	7.5	S2-2min	44.5	18	2000	3.7	S2-60min	3500	IP67	Natural
L636E-8045-P200Q18041X5RA	80VDC	318	180	750	14.1	S2-2min	121	10.5	4100	4.5	S2-60min	4100	IP67	Natural
L636E-8040-P200Q18065X8RA	80VDC	371	180	1400	26	S2-1min	146	13.1	5500	7.5	S2-60min	6500	IP67	Natural
L636E-8045-P200B06033X8RA	80VDC	243	60	1000	10	S2-4min	128	30	2600	8.15	S1	3300	IP67	Natural
L636S-8035-P200B12030X10RA	80VDC	253	120	1800	22.6	S2-2min	107	50	1910	10	S2-60min	3000	IP67	Natural
L636E-8035-P200B11618X14RA	80VDC	279	116	1800	21.8	S2-2min	184	76	1800	14	S2-15min	1800	IP67	Natural
L636E-8055-P200B10327X16RA	80VDC	293	103	2500	27	S2-10min	175	55	2700	15.5	S2-15min	2700	IP67	Natural
L636E-8035-P200B17030X20RA	80VDC	356	170	1800	32	S2-2min	224	106	1800	20	S2-15min	3000	IP67	Natural
L636E-8055-P200B16030X30RA	80VDC	369	160	1000	37	S2-5min	318	130	2200	30	S2-10min	3000	IP67	Forced Air

High-voltage Inverter Model Description

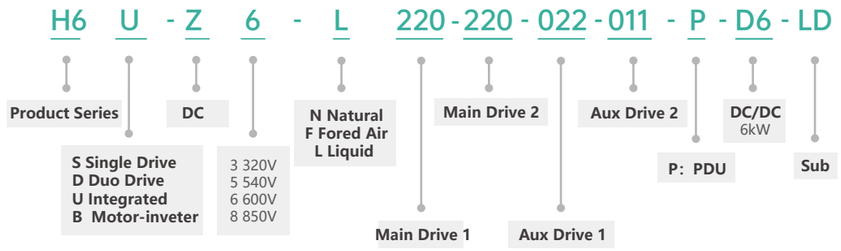



H6S Natural Series
LWH: 319×242×127mm



H6S Forced Air Series
LWH: 319×242×241mm



H6S Liquid Series
LWH: 319×242×132mm



H6S Natural Series
LWH: 373×310×118.5mm



H6S-B Liquid Series
LWH: 306×294×107mm



H6D Liquid Series
LWH: 497×304×145mm



H6B Motor-inverter Series
LWH: 321×338×362mm

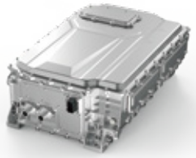

H6U-LD Series
LWH: 711×476×260mm



H6U-ED Series
LWH: 636×516×259.5mm



H6U-TD Series
LWH: 495×431×220mm

High-voltage Motor-inverter Unit Product Portfolio

Model	Voltage Level	Peak Output					Rated Output					IP Rating	Cooling Type
		Current (A)	Toque (N.m)	Peak Speed (rpm)	Power (kW)	Duty Cycle	Current (A)	Toque (N.m)	Rated Speed (rpm	Power (kW)	Duty Cycle		
H6B-Z3L045-P210B18240W25R-320MG	320VDC	155	182	4000	30	S2-2min	98	120	2000	25	S9	IP67	Liquid
H6B-Z3L045-P210B37535W34R-320MG	320VDC	292	375	3500	40	S2-2min	120	170	1900	34	S9	IP67	Liquid
H6B-Z3L045-P210B51035W40R-320MG	320VDC	243	510	3500	45	S2-2min	118	220	1700	39.2	S9	IP67	Liquid
H6B-Z3L045-P210Q27050W40R-320MG	320VDC	220	270.5	5052	45	S2-2min	124	150	2500	39.3	S9	IP67	Liquid
H6B-Z3L060-P210B45550W57R-320MG	320VDC	310	455	5000	65	S2-2min	172.5	220	2500	57.5	S9	IP67	Liquid

High-voltage Inverter Product Portfolio

Voltage Platform	Product Series	Rated Power (kW)	Peak Power (kW)	Rated Current (A)	Peak Current (A)	Cooling Type	IP Rating
320VDC	H6S-Z3N7P0	7	14	30	60	Natural	IP67
	H6S-Z3F030	30	51	100	170	Forced Air	IP67
	H6S-Z3L040	40	80	120	220	Liquid	IP67
	H6S-Z3L045-B	45	90	150	260	Liquid	IP67
	H6S-Z3L060-B	60	100	190	330	Liquid	IP67
	H6S-Z3L080	80	130	240	400	Liquid	IP67
	H6D-Z3L050-050	50&50	100&100	150&150	300&300	Liquid	IP67
540VDC	H6S-Z5N7P0	7	20	15	40	Natural	IP67
	H6S-Z5F030	30	60	50	100	Forced Air	IP67
	H6S-Z5L040	40	70	70	120	Liquid	IP67
	H6S-Z5L060	60	120	100	210	Liquid	IP67
	H6S-Z5L090	90	140	170	300	Liquid	IP67
	H6S-Z5L120	120	190	240	400	Liquid	IP67
600VDC	H6U-Z6L220-220-022-011-PD6-LD	220&220&22&11	475&475&41&23	300&300&30&16	650&650&56&32	Liquid	IP68/IP69k
	H6U-Z6L450-022-011-PD6-LD	450&22&11	770&41&23	620&30&16	1050&56&32	Liquid	IP68/IP69k
	H6U-Z6L200-170-PD6-LD	205&170	440&330	300&230	600&450	Liquid	IP68/IP69k
	H6U-Z6L350-022-011-PD6-LD	350&22&11	650&41&23	480&30&16	890&56&32	Liquid	IP68/IP69k
	H6U-Z6L170-170-011-011-PD6-LD	170&170&11&11	330&330&23&23	230&230&16&16	450&450&32&32	Liquid	IP68/IP69k
	H6U-Z6L200-200-130-PD6-ED	205&205&132	440&440&265	280&280&180	600&600&360	Liquid	IP68/IP69k
	H6U-Z6L360-130-PD6-ED	365&132	735&265	500&180	1000&360	Liquid	IP68/IP69k
	H6D-Z6L200-200-ED	205&205	440&440	280&280	600&600	Liquid	IP68/IP69k
	H6S-Z6L350-ED	350	735	500	1000	Liquid	IP68/IP69k
	H6U-Z6L200-011-PD6-TD	205&11	440&23	280&16	600&32	Liquid	IP68/IP69k
	H6U-Z6L170-011-PD6-TD	170&11	330&23	230&16	450&32	Liquid	IP68/IP69k
	H6U-Z6L110-011-PD6-TD	110&11	220&23	150&16	300&32	Liquid	IP68/IP69k
850VDC	H6U-Z8L260-260-030-015-PD6-LD	260&260&30&15	520&520&58&33	250&250&30&16	500&500&56&32	Liquid	IP68/IP69k
	H6U-Z8L500-030-015-PD6-LD	500&30&15	880&58&33	480&30&16	850&56&32	Liquid	IP68/IP69k
	H6D-Z8L260-260-ED	260&260	440&440	250&250	500&500	Liquid	IP68/IP69k
	H6S-Z8L500-ED	500	880	480	850	Liquid	IP68/IP69k

OBC/ Power Supply Model Description

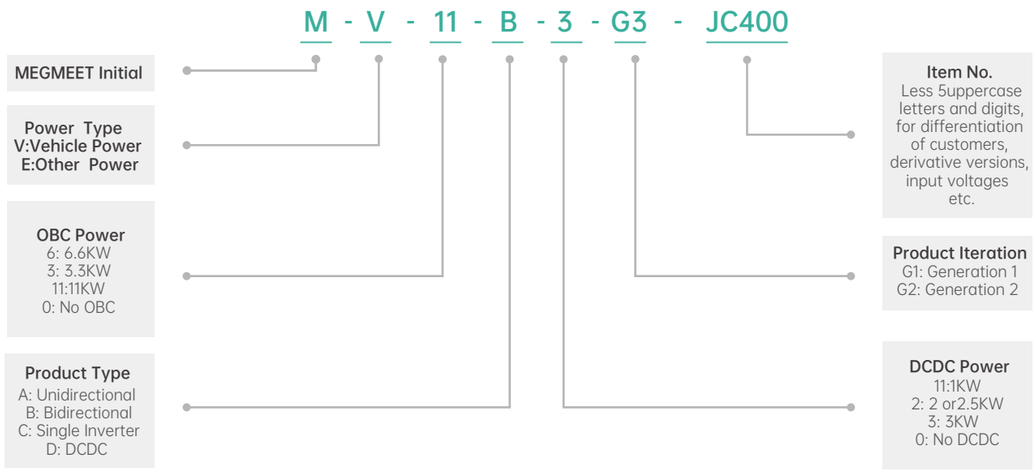

OBC/ Power Supply Product Portfolio



MV11B3-G3-JC300
LWH：372.5×282.4×74.3mm



MV11B3-G3-JC400
LWH：396.9×309.2×85mm



MV6C3-G3-Ei200
LWH：266×193.5×65mm



MV6B3-G3-PT300
LWH：281×194× 69mm



MV0D6-G3-CT500P
LWH：304×168×63.6mm



MV0D3-G3-PT202
LWH：240.5×205×57mm



MVS24375-A-G1
LWH：226×152 ×73mm



MVF24850-A-G1
LWH：199.4×180×158mm

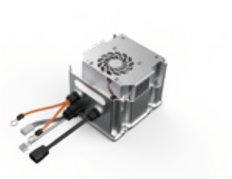

MVF482K-A-G1/MVF802K-A-G1
LWH：195 × 180 × 152.8mm



MVF803K2-A-G1 /MVF483K-A-G1
LWH：354.5×226.5×109mm



MVF806K4-A-G1
LWH：435.5×248 ×122 mm



MVF803K2-E-G1
LWH：366× 239×107mm



LEVP500-D84003
LWH：180x 93X 38mm



LPF12300SDNG1
LWH：183.8x81x47mm

OBC/ Power Supply Product Portfolio

Model	Voltage Platform	Output Voltage	OBC Output Voltage range	OBC Rated Output Power	OBC Output Current	Inverter Output Power	DCDC Input Voltage range	DCDC Rated Output Power	IP Rating	Cooling Type
MV11B3-G3-JC300	300VDC	12V&24V	230V~500VDC	9.9kW	⩽33A@Three-phase ⩽23A@Single-phase	3kVA	200V~500VDC	3kW 12V	IP67	Liquid
MV11B3-G3-JC400	600VDC	12V&24V	300V~800VDC	9.9kW	⩽19.8A@Three-phase ⩽13.2A@Single-phase	6kVA	300V~800VDC	3kW 12V	IP67	Liquid
MV6C3-G3-Ei200	600VDC	24V	400~850VDC	/	/	6kVA	/	/	IP67	Liquid
MV6B3-G3-PT300	300VDC	12V	200-500VDC	6.6kW	⩽23A	6kVA	200-500VDC	3kW 12V	IP67	Liquid
MV0D6-G3-CT500P	600VDC	24V	/	/	/	/	400-900VDC	6kW 24V	/	Liquid
MV0D3-G3-PT202	300VDC	12V	/	/	/	/	200-470VDC	3kW 12V	IP67	Liquid
MVS24375-A-G1	24VDC	/	3~32.5VDC	375W	⩽15A	/	/	/	IP67	Natural
MVS24750-A-G1	24VDC	/	3~32.5VDC	750W	⩽30A	/	/	/	IP67	Natural
MVF24850-A-G1	24VDC	/	3~32.5VDC	850W	⩽36A	/	/	/	IP67	Natural
MVF482K-A-G1	48VDC	/	6~68VDC	2kW	⩽40A	/	/	/	IP67	Forced Air
MVF483K-A-G1	48VDC	/	6~68VDC	3kW	⩽60A	/	/	/	IP67	Forced Air
MVF802K-A-G1	80VDC	/	60~110VDC	2kW	⩽25A	/	/	/	IP67	Forced Air
MVF803K2-A-G1	80VDC	/	60~110VDC	3.2kW	⩽40A	/	/	/	IP67	Forced Air
MVF806K4-A-G1	80VDC	/	60~110VDC	6.4kW	⩽80A	/	/	/	IP67	Forced Air
MVF803K2-E-G1	80VDC	/	60~110VDC	3.2kW	⩽40A	/	/	300W 12V	IP67	Forced Air
LEVP500-D84003	84VDC	/	/	/	/	/	50-115Vdc	500W 12V	IP67	Natural
LEVP500-D48001	48VDC	/	/	/	/	/	35-70Vdc	500W 12V	IP67	Natural
LPF12300SDNG1	48/84VDC	/	/	/	/	/	36-115Vdc	300W 12V	IP67	Natural
LPF24300SDNG1	48/84VDC	/	/	/	/	/	36-115Vdc	300W 24V	IP67	Natural